Wikiprint Book

Title: jpf-statechart

Subject: Java Path Finder - projects/jpf-statechart

Version: 6

Date: 03/17/2013 08:39:29 PM

Table of Contents

TracNav 3
- Introduction... 3
- Installing JPF... 3
- User Guide... 3
- Developer Guide... 3
- Projects 3
- About... 3

jpf-statechart 4

Overview 4
- Guidance Scripts 4

Repository 4

Additional Documentation 4

Status 5

TracNav

- JPFWiki - Welcome Page

  Introduction...

  Installing JPF...

  User Guide...

  Developer Guide...

  Projects

  - jpf-core
  - jpf-actor
  - jpf-awt
  - jpf-awt-shell
  - jpf-concurrent
  - jpf-cv
  - jpf-delayed
  - jpf-guided-test
  - jpf-mango
  - jpf-racefinder
  - jpf-rtembed
  - jpf-statechart
  - net-iocache
  - jpf-aprop
  - jpf-numeric
  - jpf-symbc
  - jpf-concolic
  - jpf-symbc-load?
  - jpf-extended-test-gen
  - jpf-parallel-spf?
  - eclipse-jpf
  - netbeans-jpf
  - jpf-inspector
  - jpf-shell
  - jpf-template
  - jpf-trace-server
  - standard NB example
- Summer Projects
- External Projects
- Change(B)log

  About...

- Events
- Presentations
- Papers
- FAQ
- History?
- Support
- People?
- Playground
- Table of Context

jpf-statechart

The jpf-statechart project is a framework for using Java Pathfinder to execute and systematically verify UML state charts. The framework makes it easy to translate UML statechart diagrams into Java code and to model check them for any desired properties.

Overview

To use jpf-statechart to analyze your UML state chart, you must translate the state chart into Java (of course!), then run it under JPF within the jpf-statechart framework. The process looks like:

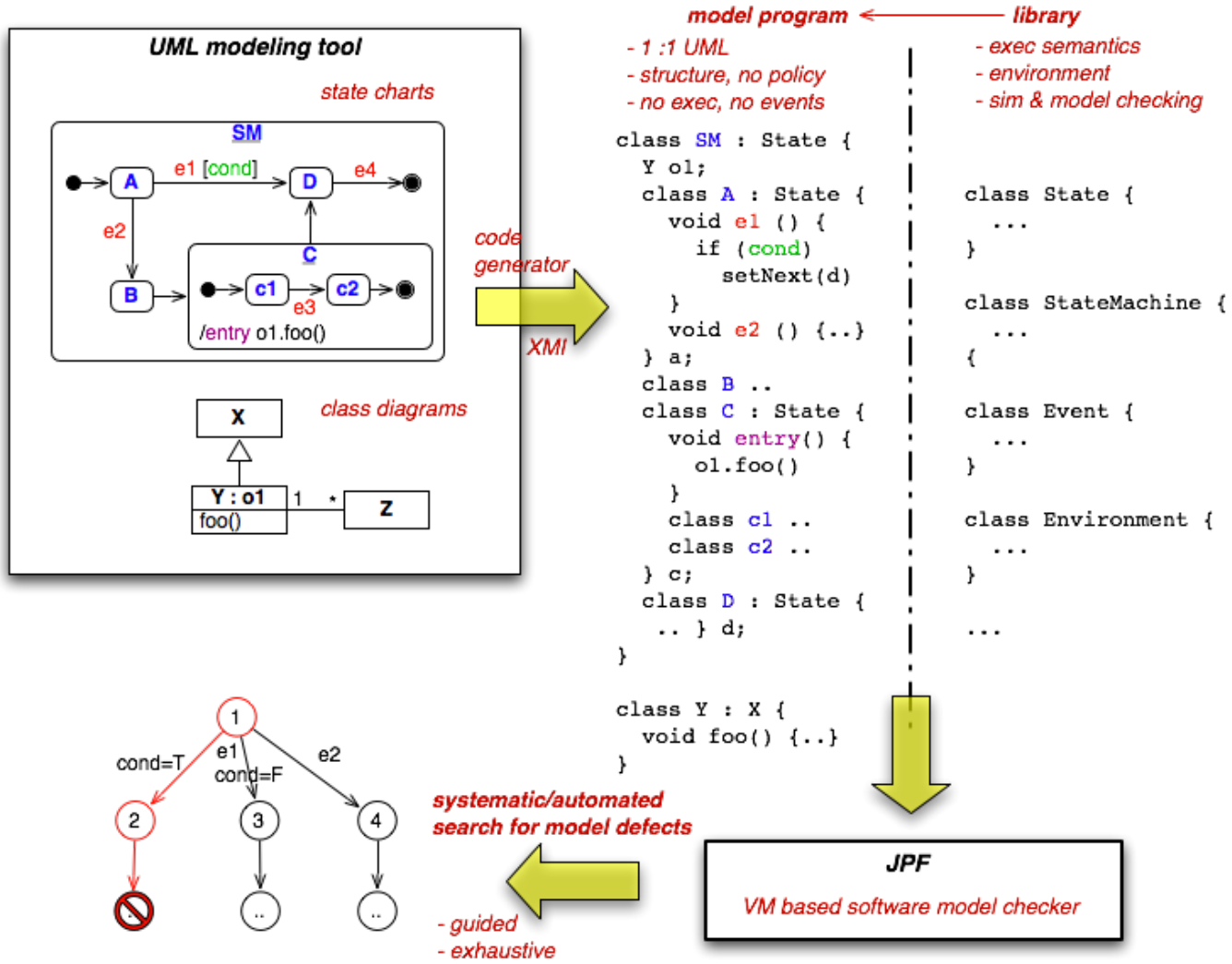

At this time you have to translate your state chart into Java by hand. Many UML tools can export their models in the XML Metadata Interchange (XMI) format, so in the future we will have tools that translate XMI files into Java code in the required format. Until then, you should follow these guidelines.

Guidance Scripts

Sometimes you do not want JPF to explore your entire UML model. Maybe your model is large and at the moment you only care about a small part of it. Or perhaps your model is incomplete. You can tell JPF which parts of the model to explore by giving it a guidance script.

Repository

The Mercurial repository is at http://babelfish.arc.nasa.gov/hg/jpf/jpf-statechart

Additional Documentation

The jpf-statechart extension was presented at IEEE/Aero'08. The paper can be found on http://ti.arc.nasa.gov/m/pub-archive/1402/1402%20(Mehlitz).pdf, the presentation slides are uploaded to the presentations page.

Status

This project is currently not under active development, but is still updated and tested to be compatible with jpf-core.